

GDP8.0-10.0MX6

FORKLIFT TRUCK

TECH GUIDE

A6A4 MEA V1R0 July 2026

DIMENSIONAL DRAWINGS

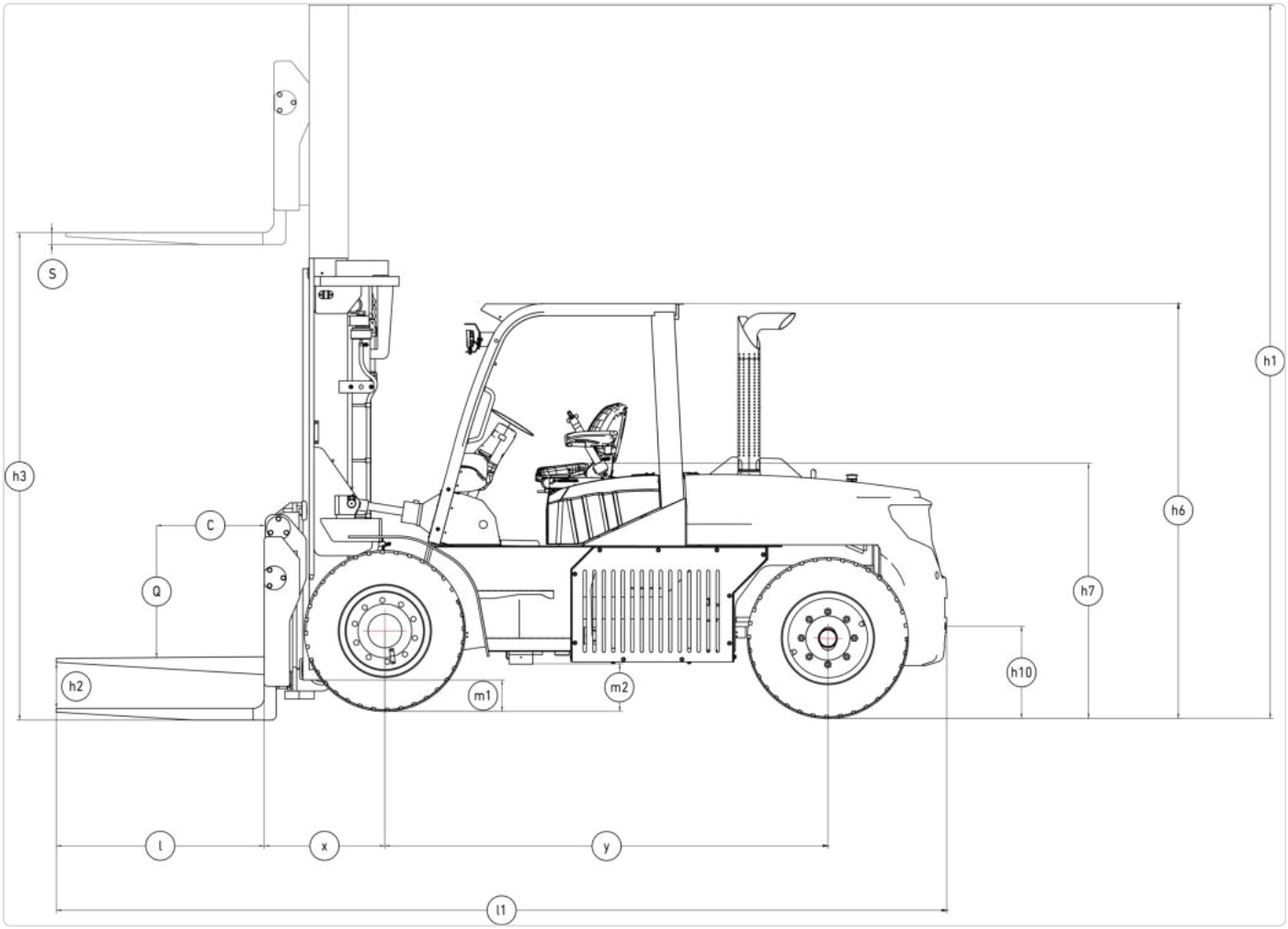

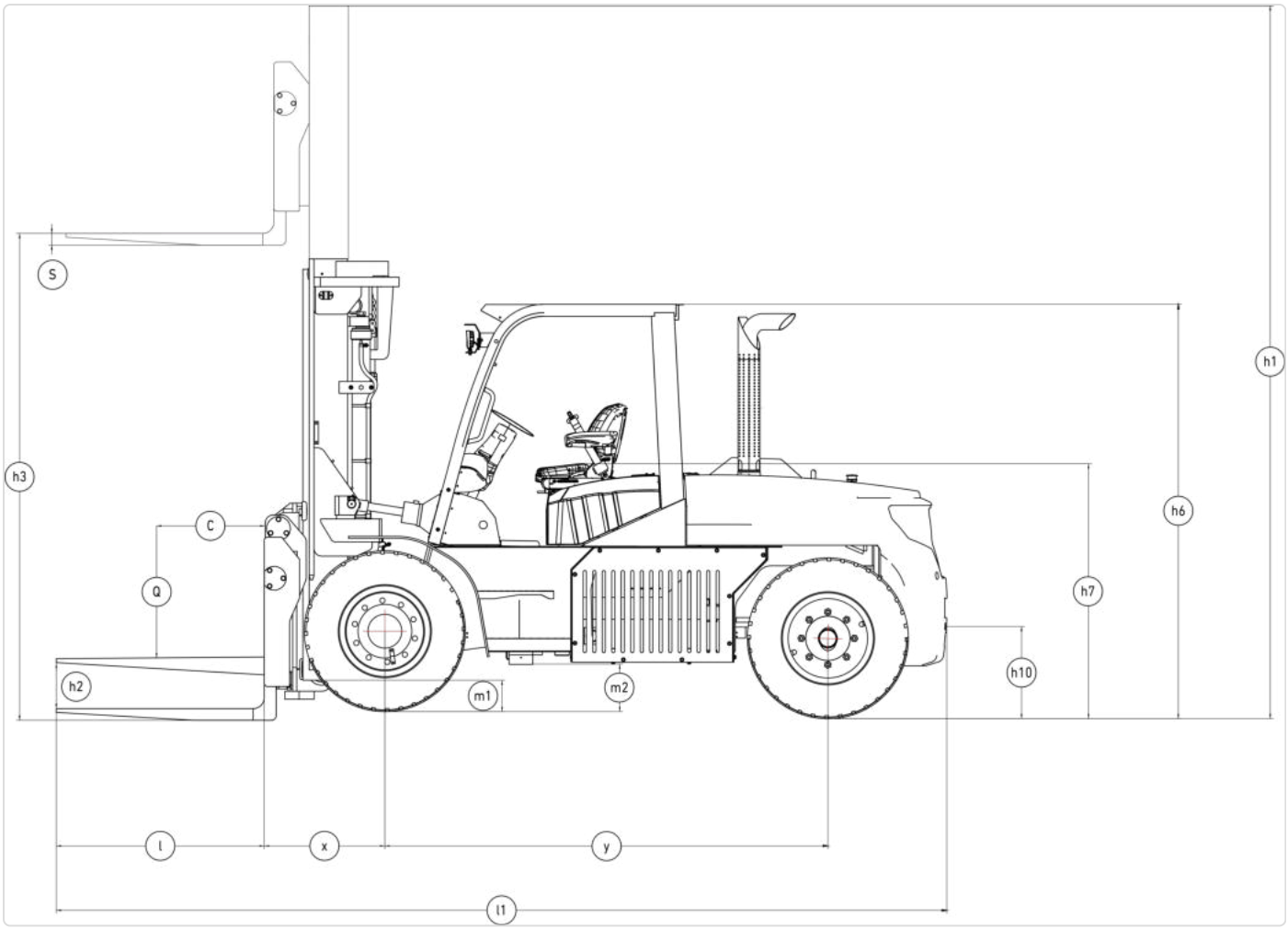
S
h1
h3
C
h6
Q
h7
h10
h2
m1
m2
l
x
y
l1

SPECIFICATIONS

GENERAL

1.1	MANUFACTURER		YALE	YALE
1.2	Model designation		GDP8.0MX6	GDP10.0MX6
1.3	Powertrain / drivetrain		Diesel	Diesel
1.4	Operator type		Seat	Seat
1.5	Rated capacity / rated load	Q (kg)	8000	10000
1.6	Load centre distance	c (mm)	600	600
1.8	Load distance	x (mm)	723	723
1.9	Wheelbase	y (mm)	2800	2800

WEIGHTS

1.2	MODEL DESIGNATION		GDP8.0MX6	GDP10.0MX6
2.1	Service weight (1)	kg	11748	12788
2.2	Axle loading, laden front / rear	kg	17903/1845	20876/1912
2.3	Axle loading, unladen front / rear	kg	6137/5611	6169/6619

(1) based on 2LFL/3000mm Mast/Pneumatic Tyre, 2250mm Wide Individual Fork Positioner and 1220mm forks

TYRES / CHASSIS

1.2	MODEL DESIGNATION		GDP8.0MX6	GDP10.0MX6
3.1	Tyres, front / rear		Pneumatic	Pneumatic
3.2	Tyre size, front		9.00-20 14PR	9.00-20 14PR
3.3	Tyre size, rear		9.00-20 14PR	9.00-20 14PR
3.5	wheels, number front / rear (× = driven wheels)		4/2	4/2
3.6	Track width, front	b10 (mm)	1918	1918
3.7	Track width, rear	b11 (mm)	1723	1723

DIMENSIONS

1.2	MODEL DESIGNATION		GDP8.0MX6	GDP10.0MX6
4.1	Mast tilt : forward / backwards	α / β (deg)	6/12	6/12
4.2	Height of mast lowered (unloaded)	h1 (mm)	2850	2850
4.3	Free lift	h2 (mm)	170	170
4.4	Lift height (bottom of forks)	h3 (mm)	3000	3000
4.5	Height of mast extended (unloaded)	h4 (mm)	4250	4250
4.7	Height of overhead guard (open cab)	h6 (mm)	2580	2580
4.7.1	Height of overhead guard (closed cab)	h6 (mm)	2580	2580
4.7.2	Height of overhead guard (closed cab with Airconditioning)	h6 (mm)	2755	2755
4.8	Seat height (Seat Index Point, ISO 5353)	h7 (mm)	1465	1465
4.12	Coupling height	h10 (mm)	485	485
4.19	Overall length	l1 (mm)	5500	5500
4.20	Length to face of forks	l2 (mm)	4280	4280
4.21	Overall width truck	b2 (mm)	2164	2164
4.22	Fork dimensions	s/e/l (mm)	80/175/1220	80/175/1220
4.23	Carriage type		Pin type	Pin type
4.24	Carriage width	b3 (mm)	2250	2250
4.25	Distance over fork arms, minimum / maximum	b5 (mm)	434 / 2100	434 / 2100
4.31	Ground clearance, under mast (w/o load)	m1 (mm)	225	225
4.32	Ground clearance, centre of wheelbase	m2 (mm)	302	302
4.34	Aisle width for pallets 1000 x 1200 crossways	Ast (mm)	6020	6020

1.2	MODEL DESIGNATION		GDP8.0MX6	GDP10.0MX6
4.35	Outer turning radius	Wa (mm)	3900	3900
4.36	Inner turning radius	b13 (mm)	1587	1587

PERFORMANCE DATA

1.2	MODEL DESIGNATION		GDP8.0MX6	GDP10.0MX6
5.1	Travel speed laden / unladen	km/h	21/25	21/25
5.2	Lifting speed laden / unladen	mm/s	350/360	350/360
5.3	Lowering speed laden/unladen	mm/s	385/380	385/380
5.5	Drawbar pull laden/unladen	KN	58/52	58/52
5.7	Gradeability laden/unladen @ 1.6 km/hour	%	20/20	20/20
5.8	Gradeability laden/unladen @ max	%	30/46	26/42

ENGINE

1.2	MODEL DESIGNATION		GDP8.0MX6	GDP10.0MX6
7.1	Engine manufacturer / model (Stage IIIA / R96)		Cummins / QSF3.8 C115	Cummins / QSF3.8 C115
7.2	Engine power according to ISO 1585 (Stage IIIA / R96)	KW/hp	86 / 115	86 / 115
7.2.2	Maximum engine torque (Stage IIIA / R96)	Nm@rpm	470 Nm @ 1100~1700 rpm	470 Nm @ 1100~1700 rpm
7.3	Rated speed	min-1	2200	2200
7.4	Number of cylinders/displacement	(-)/(cm3)	4/3753	4/3753
7.9	Vehicle electrical system voltage	V	24	24
7.10	Battery voltage, nominal capacity	(V)/(Ah)	24/80	24/80

ADDITIONAL DATA

1.2	MODEL DESIGNATION		GDP8.0MX6	GDP10.0MX6
10.1	Operating pressure for attachments	bar	140	140
10.2	Oil volume for attachments	l/min	90	90
10.4	Fuel tank,capacity	l	150	150
10.7	Sound pressure level at the driver's seat with closed cab	dB (A)	87.3/87.5	87.3/87.5
10.7.1	Sound power level during the workcycle	dB (A)	108.6	108.6

MAST TABLE

GDP8.0MX6 Capacity (kg) @ 600mm Load Centre with 1220 mm forks and Pneumatic Drive Tyres

2-STAGE LFL	2-STAGE LFL	2-STAGE LFL	2-STAGE LFL	2-STAGE LFL	2-STAGE LFL	2-STAGE LFL	2-STAGE LFL	2-STAGE LFL
Lift Height	Overall lowered height	Extended height)	Free lift height	Mast tilt forward	Mast tilt backward	2250mm Wide Individual Fork Positioner	2250mm Wide Apron Style Sideshift with Simultaneous Fork Positioning	2650mm Wide Apron Style Sideshift with Simultaneous Fork Positioning
mm	mm	mm	mm	(°)	(°)	kg	kg	kg
3000	2850	4285	210	6	12	8000	7680	7500
3300	3000	4585	210	6	12	8000	7660	7500
3500	3100	4785	210	6	12	8000	7660	7480
3750	3225	5035	210	6	12	8000	7640	7480
4000	3400	5335	210	6	12	8000	7620	7460
4500	3650	5835	210	6	12	8000	7600	7440
5000	3900	6335	210	6	6	7840	7460	7180
5500	4200	6885	210	3	6	7660	7280	7100
6000	4450	7385	210	3	6	7000	6660	6580

GDP10.0MX6 Capacity (kg) @ 600mm Load Centre with 1220 mm forks and Pneumatic Drive Tyres

2-STAGE LFL	2-STAGE LFL	2-STAGE LFL	2-STAGE LFL	2-STAGE LFL	2-STAGE LFL	2-STAGE LFL	2-STAGE LFL	2-STAGE LFL
Lift Height	Overall lowered height	Extended height)	Free lift height	Mast tilt forward	Mast tilt backward	2250mm Wide Individual Fork Positioner	2250mm Wide Apron Style Sideshift with Simultaneous Fork Positioning	2650mm Wide Apron Style Sideshift with Simultaneous Fork Positioning
mm	mm	mm	mm	(°)	(°)	kg	kg	kg
3000	2850	4285	210	6	12	10000	9640	9460
3300	3000	4585	210	6	12	10000	9620	9460
3500	3100	4785	210	6	12	10000	9620	9440
3750	3225	5035	210	6	12	10000	9600	9440
4000	3400	5335	210	6	12	10000	9580	9420
4500	3650	5835	210	6	12	10000	9560	9380
5000	3900	6335	210	6	6	9840	9400	9220
5500	4200	6885	210	3	6	8980	8580	8520
6000	4450	7385	210	3	6	8000	7640	7540

OPTIONS

Specifications Table

STANDARD AND OPTIONAL EQUIPMENT	STD	OPT
PERFORMANCE		
Cummins QSF3.8 C115 (Stage IIIA /R96)	x	
Wastegate turbocharger, water cooled	x	
Hibernate Idle	x	
Powertrain protection system	x	
Warning and engine stop on low coolant & low engine oil level		x
Air intake (raised)	x	
Air intake (raised) with cyclonic pre cleaner		x
High mount exhaust	x	
ZF 3WG94S 3F/3R Electronic control transmission	x	
Drive axle with wet disk brakes	x	
DRIVE		
Travel speed limiter - unconditional and customer adjustable		x
09.00 - 20 14PR pneumatic Bias Ply drive and steer tires	x	
LIFT		
2 Stage Limited Free Lift mast	x	
Mast tilt - 3° Forward / 6° Back		x
Mast tilt - 6° Forward / 6° Back		x
Mast tilt - 6° Forward / 12° Back	x	
HANDLING		
2250mm (89") wide individual fork positioner	x	
2250mm (88") wide sideshift, simultaneous fork positioner		x
2450mm (96") wide sideshift, simultaneous fork positioner		x
2650mm (104") wide sideshift, simultaneous fork positioner		x
1220mm Long x 80mm Thick x 175mm Wide Pin type forks with standard taper	x	
Pin type forks (various sizes)		x
ERGONOMICS		
Open operator compartment (without doors & screens)	x	
Partial cab operator compartment		x
Enclosed operator cabin		x
Isolated cabin mounting for low noise and vibration		x
Operator presence system	x	
Full suspension seat	x	
Low backrest seat	x	
Armrest on left side	x	
Vinyl seat cover	x	
Floor mat	x	
"I"-pattern front and rear wipers		x
Glass top screen		x
Multifunction display panel	x	
Mechanical lever hydraulic controls	x	
Steering wheel with spinner knob	x	
Tilting Steering Column	x	
Directional control lever on steering column	x	
Hyster Monotrol pedal directional control		x
Manual park brake	x	
Heater		x
Air conditioning		x

STANDARD AND OPTIONAL EQUIPMENT	STD	OPT
Recirculation fan		x
VISIBILITY		
Dual mirrors side view	x	
Rear view camera system		x
Radar object detection system		x
LED work lights	x	
Turn signals, hazard & marker lights (LED)	x	
OPERATION		
Horn	x	
Rear drive handle with horn button		x
Visible alarm – Amber strobe light	x	
Audible alarm – Reverse direction activated	x	
Key switch start	x	
Hyster Tracker wireless asset management - Monitoring	x	
Hyster Tracker wireless asset management - Access / Verification		x
Load weight indicator		x
24 volt electrical system	x	
APPEARANCE		
Hyster yellow paint base truck	x	
SUPPLEMENTAL		
Literature package	x	
Operator’s manual	x	
Warranty: 24 Months / 4,000 Hours Parts manufacturer’s warranty	x	

COMPANY INFORMATION AND NOTICES



Yale Lift Truck Technologies

HYSTER-YALE UK LIMITED trading as Yale Lift Truck Technologies.
Registered in England and Wales. Company Registration Number: 02636775. Registered Address: Centennial House, Building 4.5, Frimley Business Park, Frimley, Surrey, GU16 7SG, United Kingdom.
yale.com

SAFETY: Yale® products sold into EU countries, UK, and Turkey conform to applicable EU, UK, and Turkey legislation (including Machinery Directive 2006/42/EC) and are CE marked. Yale products sold into other countries may be ordered in conformance with EU requirements and will likewise be CE marked.
NOTICE: Care must be exercised when operating material handling equipment. Operators must be trained and must read, understand and follow the instructions contained in the operating manual. Products may be shown with optional equipment and/or features not available in all regions. Product performance may be affected by its condition, how it is equipped and the application. Specifications are subject to change without notice. Consult your Yale® Dealer if any of the information shown is critical to your application.

© 2026 Hyster-Yale Materials Handling, Inc., all rights reserved. YALE and YALE LOGO are trademarks of Hyster-Yale Materials Handling, Inc.